A Member of the YIZUMI Group

## Yizumi-HPM Technical Center Iberia, Ohio

Link to Website

- **1877** - HPM was incorporated as the Hydraulic Press Manufacturing Company in Mount Gilead, Ohio. The company built apple cider presses and continued this business into the early part of the 20th Century.

- **1920** - HPM started to manufacture hydraulic presses that were used in a number of markets, including textiles, railroads, and food processing.

- **I931** - HPM manufactured the first American-made injection molding machine.

- **1956** - HPM merged with the Koehring Company of Milwaukee, Wisconsin to form the HPM Division of Koehring. The HPM Division was operated as a separate unit, and operations remained in Mount Gilead, Ohio. Koehring grew HPM through acquisitions, leading to additional markets and opportunities for the manufacture of hydraulic machines.

- **1959** - Koehring purchased Cast-Master producing die cast machines and merged the company with HPM's operations.

- **1971** - Prodex Division, a maker of extrusion equipment, was merged with HPM's operations.

- 1976 - Koehring sold the HPM Division to a group of employees and local investors, and the company was re-named HPM Corporation.

YIZUMI | HPM

A Member of the YIZUMI Group

- 1983 - HPM purchased New Britain, a Connecticut-based toggle injection molding machine manufacturer.

- **1996** - HPM was purchased by a group of investors in California, and organized under the parent company HPM-Stadco.

- **2001** - Taylor's Industrial Services, LLC purchased HPM Corporation, which was renamed "Taylor's Industrial Services, HPM Division.

- **March 29th, 2011,** YIZUMI Precision Machinery Co., Ltd, located in China, acquired all HPM intellectual properties.

- **July 8th , 2011,** HPM North America Corporation (HPM NA) was set up in Marion, Ohio. HPM North America subsequently purchased the BIVOUAC Engineering Service company.

- **August 26th, 2011,** HPM NA joined the North America Die Casting Association, and resumed manufacturing of heavy duty die casting machines.

- **February, 2012**, HPM NA resumed its SPI membership, and showed an injection molding machines at NPE2012 in Orlando in April.

YIZUMI | HPM

A Member of the YIZUMI Group

**Headquarters** of Yizumi Located in Shunde Hi-tech Zone, covers an area of 80,000 square meters. It is also the biggest comprehensive plant that is fully-equipped.

Yizumi Wusha Plant is located in Shunde Hi-tech Zone in Wusha, covering an area of 81,117 square meters

Yizumi Suzhou Plant located in Wujiang Economic Development Zone in Suzhou (90km from Shanghai), covers an area of 33,213 square meters.


YIZUMI | HPM

A Member of the YIZUMI Group

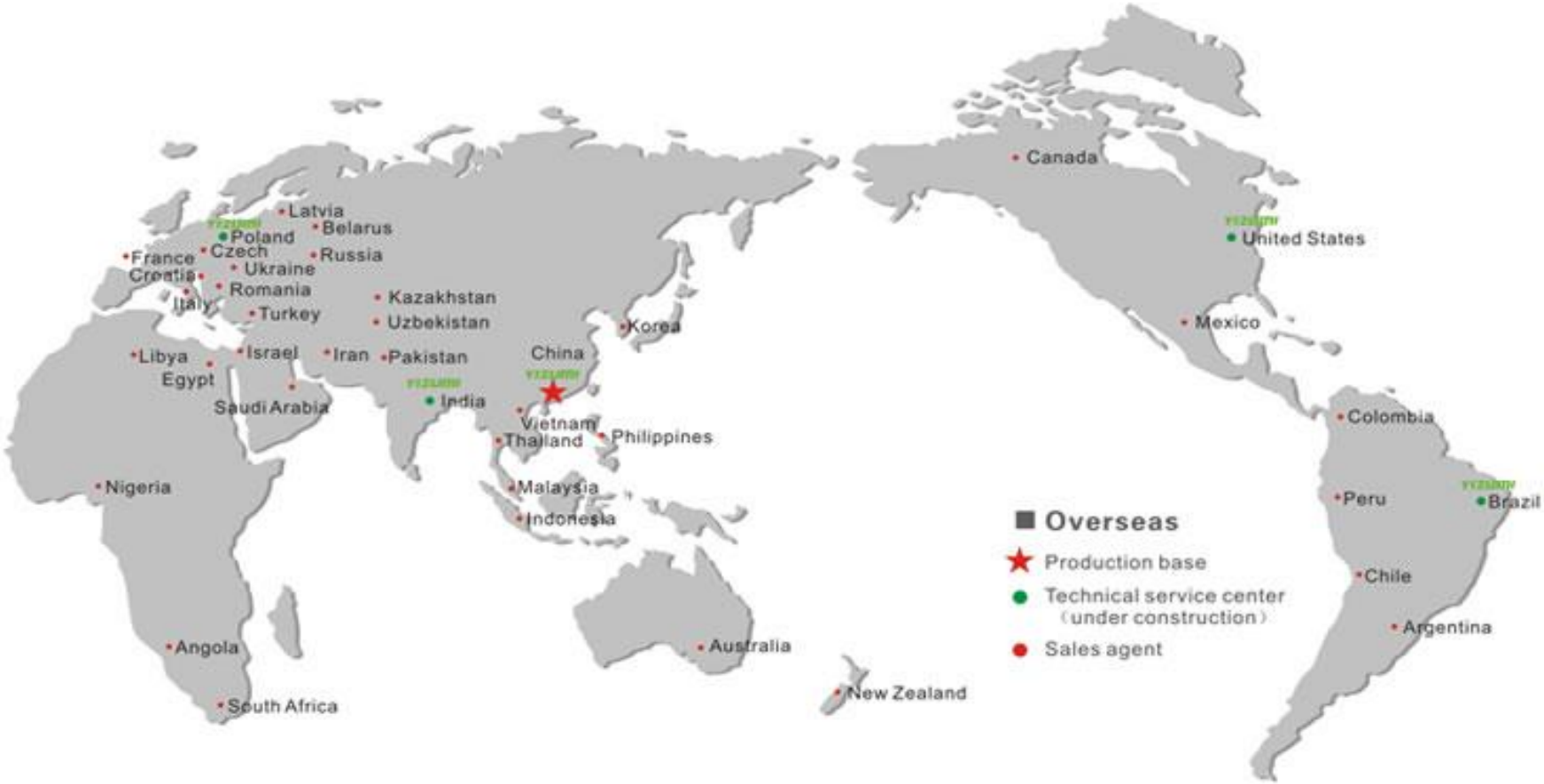


YIZUMI | HPM

A Member of the YIZUMI Group

# *SERVO PUMP A5 SERIESTOGGLE MACHINES*
# *15 MODELS - FROM 65 TONS TO 1100 TONS*

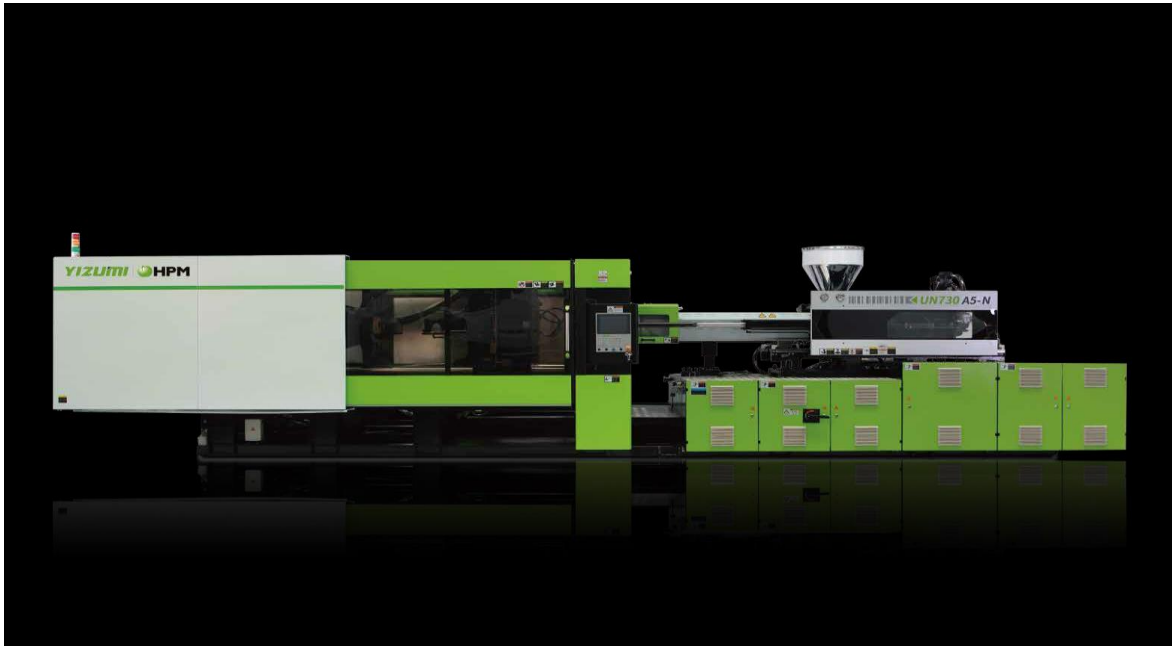


**Combining our 50+ years experience in supplying proven 5-point toggles with 21st century servo pump technology, the A5 series will provide your shop floor with a machine that will run fast, be repeatable and save money.**

YIZUMI | HPM

A Member of the YIZUMI Group

# *SERVO PUMP DP SERIES TWO PLATEN MACHINES*
# *12 MODELS - FROM 990 TONS TO 3500 TONS*

**Combining our 25+ years experience in supplying proven large tonnage two platen machines with 21st century servo pump technology, the DP series will provide your shop floor with a machine that will run fast, be repeatable and save money.**

YIZUMI | HPM

A Member of the YIZUMI Group

# Die Casting Solutions

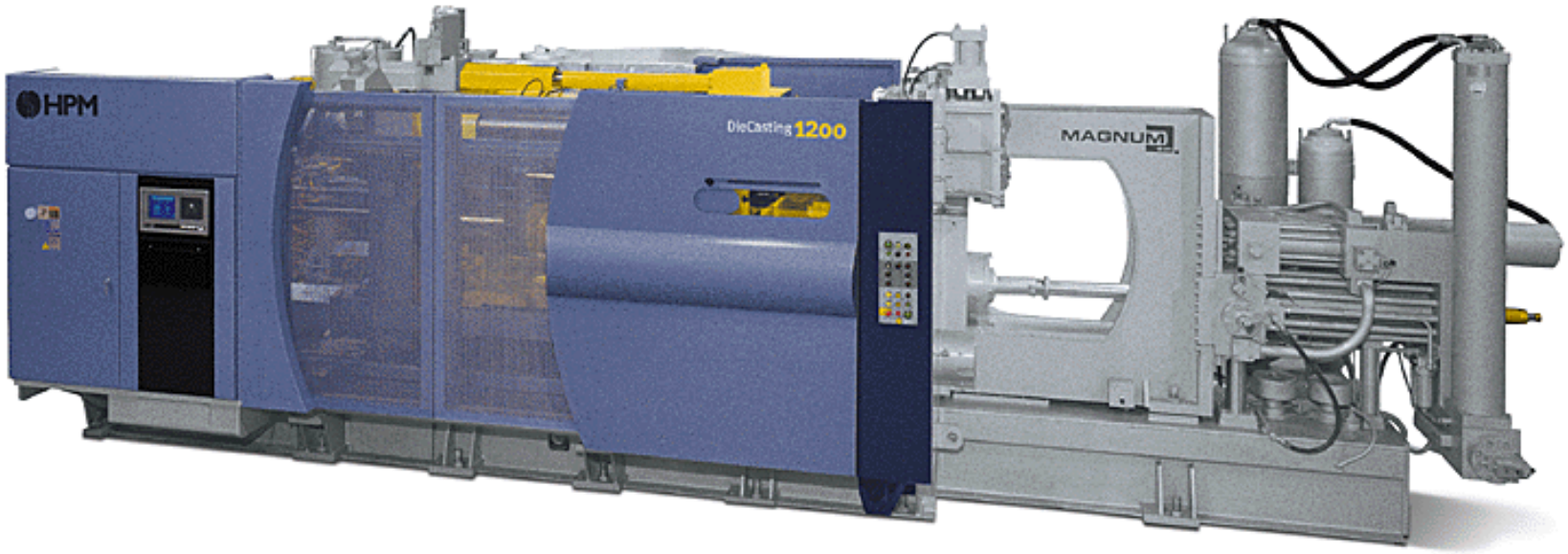


***MODEL-II-A SERIES DIE CASTNG MACHINES***
***12 MODELS - FROM 200 TONS TO 5000 TONS***

YIZUMI | HPM

A Member of the YIZUMI Group

# *ENERGY CONSUMPTION*

## Plastic Injection Molding Machinery

**Presenter - Bill Duff,**

**General Manager Sales**

**YIZUMI-HPM Corporation**

A Member of the YIZUMI Group

# MACHINE TERMINOLOGIES

HYDRAULIC

HYBRID?

ELECTRIC

YIZUMI | HPM

A Member of the YIZUMI Group

FIG. 1

# PRODUCT COST ANALYSIS FOR INJECTION MOULDED PARTS

1 costs for material
2 costs for machine
3 costs for mould
4 costs for personnel

2.1 fixed costs for units
2.2 costs for power
2.3 costs for water
2.4 maintenance costs

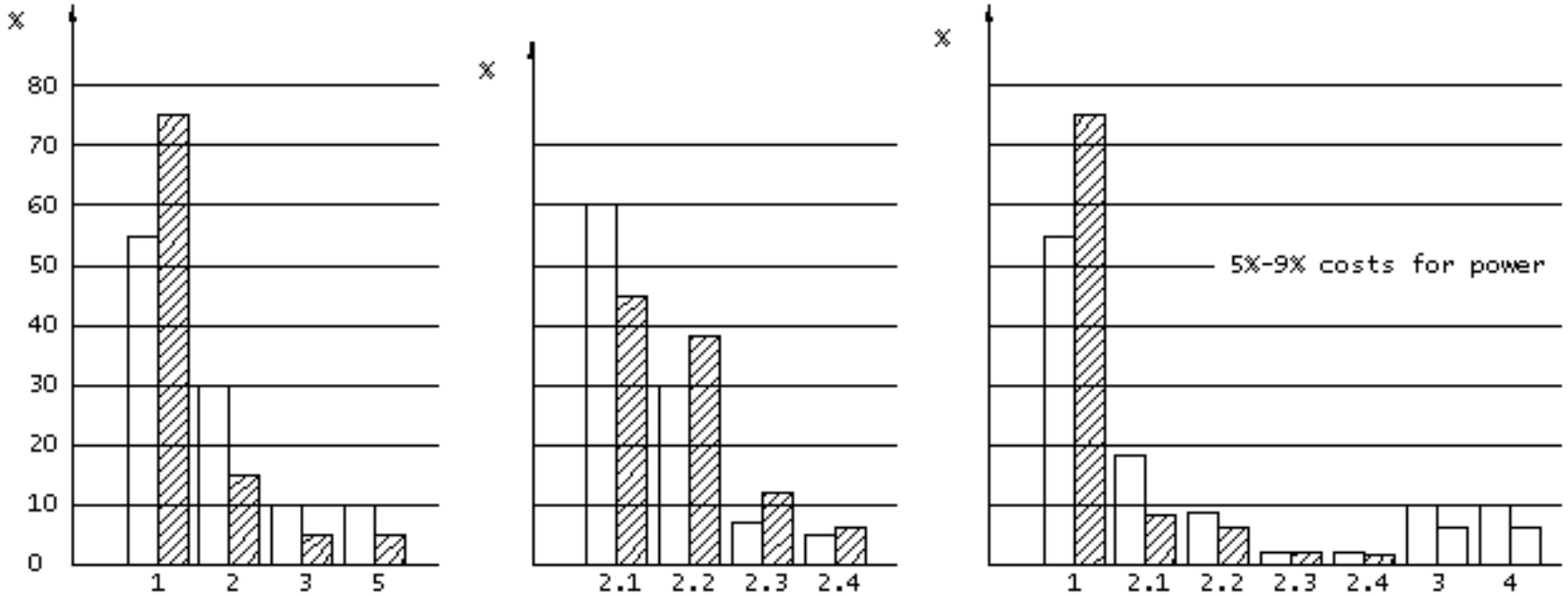


Break-down of the production costs

technical parts

packing

YIZUMI | HPM

A Member of the YIZUMI Group

# AVERAGE BREAK-UP OF ENERGY CONSUMPTION

| | |
|---|---|
| TOTAL MOLD MOVEMENT | 10.00% |
| INJECTION UNIT FORWARD | 01.00% |
| INJECTION | 08.50% |
| PACK / HOLD PRESSURE | 07.00% |
| PLASTICIZING & HEATING | 70.00% |
| COOLING / INJ.-UNIT-RETRACT/IDLING. | 10.00% |
| EJECTOR FORWARD | 02.00% |
| EJECTOR RETRACT | 01.50% |

# TECHNOLOGY

# HYDRAULIC MACHINERY

YIZUMI | HPM

A Member of the YIZUMI Group

# TECHNOLOGY

## CLASSIC (Old)
## &
## NEW GENERATION
## HYDRAULIC
## MACHINERY

YIZUMI | HPM

A Member of the YIZUMI Group

# HYDRAULIC INJECTION MOLDING MACHINE
# VARIETY OF SYSTEMS

## ALL MOTIONS HYDRAULICALLY DRIVEN

- ***Fixed Speed Electric Motor / Fixed Delivery Hydraulic Pump (Classic System)***
- ***Fixed Speed Electric Motor / Variable Delivery Hydraulic Pump (Classic System)***
- ***Variable (VFD) Speed Electric Motor / Fixed Delivery Hydraulic Pump***
- ***Variable (VFD) Speed Electric Motor / Variable Delivery Hydraulic Pump***
- ***Variable Speed Servo Electric Motor / Fixed Delivery Hydraulic Pump***

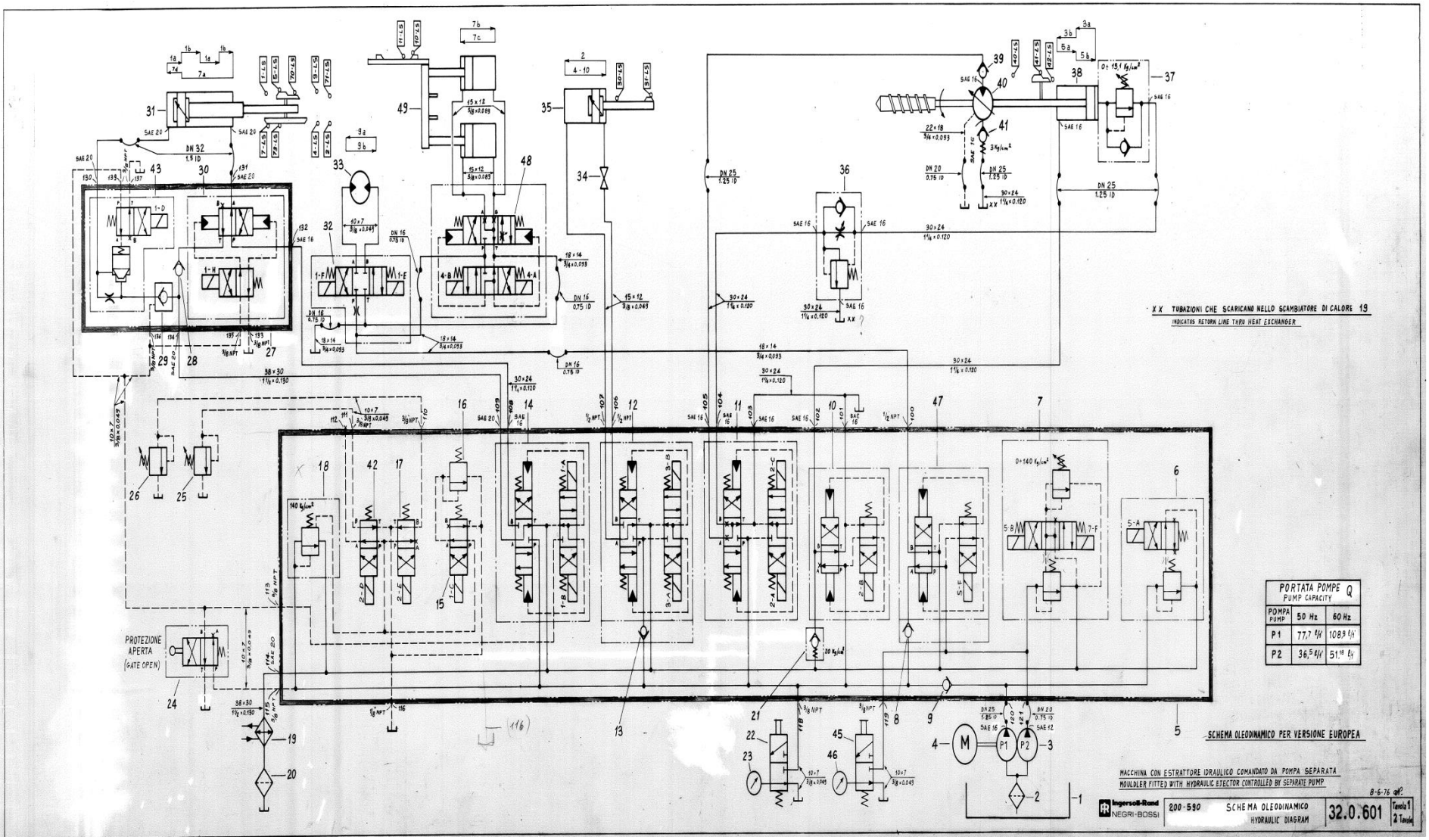


YIZUMI | HPM

A Member of the YIZUMI Group

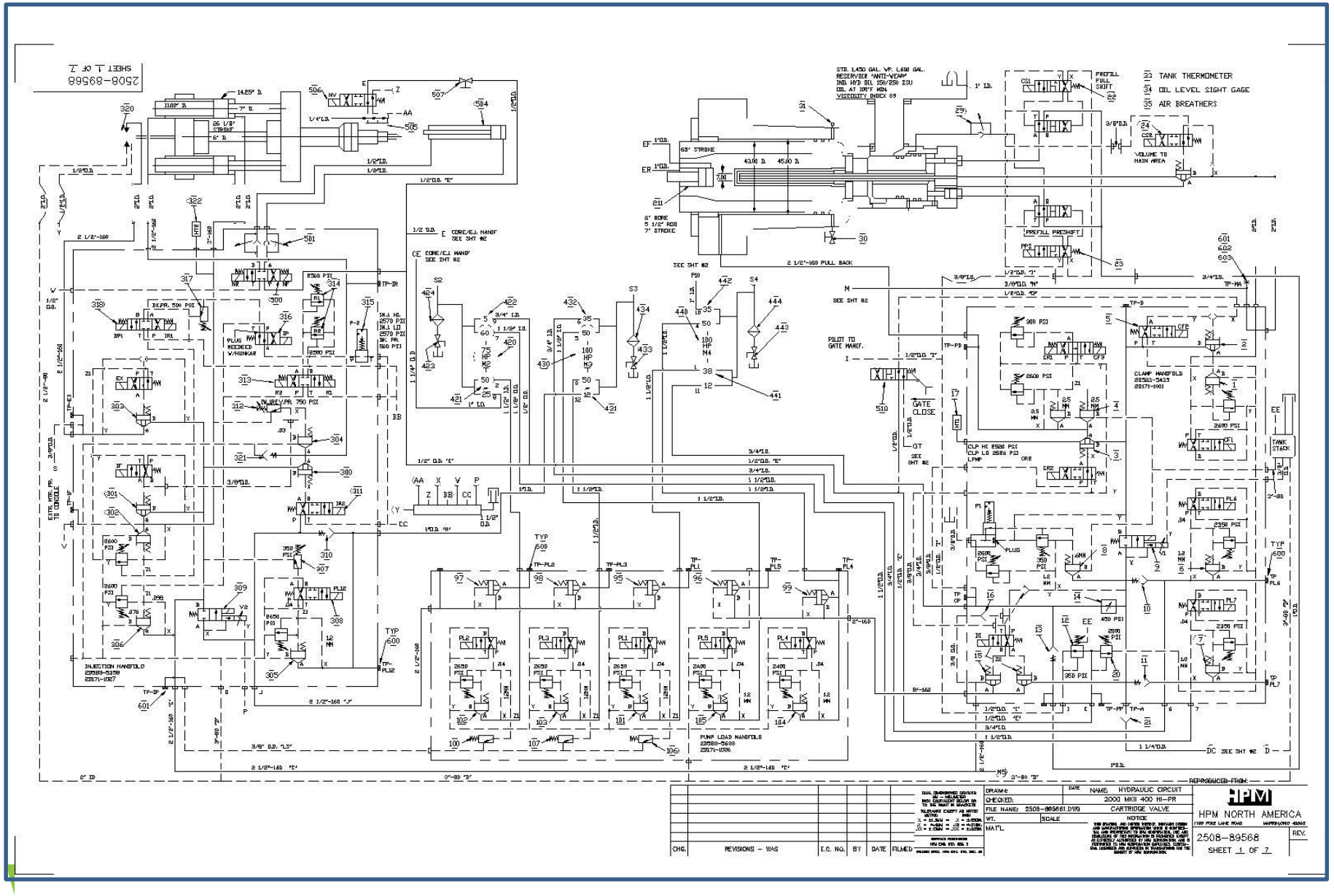
2508-89568
SHEET 1 OF 7
STD. 1450 GAL. VP. 1,600 GAL.
RESERVOIR "ANTI-WEAR"
IND. HYD OIL 150/250 SSU
OIL AT 100°F MIN
VISCOSITY INDEX 89
TANK THERMOMETER
OIL LEVEL SIGHT GAGE
AIR BREATHERS
PREFILL FULL SHIFT
PREFILL PRESHIFT
VOLUME TO MAIN AREA
63" STROKE
43.00 D.
45.00 D.
8" BORE
5 1/2" ROD
7" STROKE
CORE/EJ. MANIF SEE SHT #2
SEE SHT #2
PILOT TO GATE MANIF.
GATE CLOSE
CLAMP MANIFOLD
TANK STACK
INJECTION MANIFOLD
PUMP LOAD MANIFOLD
REPRODUCED FROM:
DRAWN:
CHECKED:
FILE NAME: 2508-895681.DWG
WT.
SCALE
MAT'L
DATE
NAME: HYDRAULIC CIRCUIT
2000 MKII 400 HI-PR
CARTRIDGE VALVE
NOTICE
HPM NORTH AMERICA
2508-89568
SHEET 1 OF 7
REV.
CHG.
REVISIONS - WAS
E.O. NO.
BY
DATE
FILMED

# Average Machine Oil Cooling Costs Classic Hydraulic Machine

***Machine Oil Cooling***

114 BTU/min required for 150 ton that result in 2 kw energy consumption.

180 BTU/min required for 300 ton that result in 3.6 kw energy consumption.

YIZUMI | HPM

A Member of the YIZUMI Group

# New Generation Hydraulic Machines

YIZUMI | HPM

A Member of the YIZUMI Group

# New Generation Hydraulic Machines

50% to 80% of the energy used in traditional hydraulic injection molding machine can be saved; production cost is reduced and the competitiveness is enhanced.

Oil temperature is kept low, and water saving is about 60%. Not only service life of hydraulic oil is extended, but also, temperature and noise level in the plant is reduced, and working environment is improved.

With the servo motor and high-efficiency pumps, discharge rate can be higher than 95%, the pump can keep high efficiency operation under high pressure at low and high flow rates.

# HYDRAULIC INJECTION MOLDING MACHINE
# VARIETY OF SYSTEMS
# ALL MOTIONS HYDRAULICALLY DRIVEN

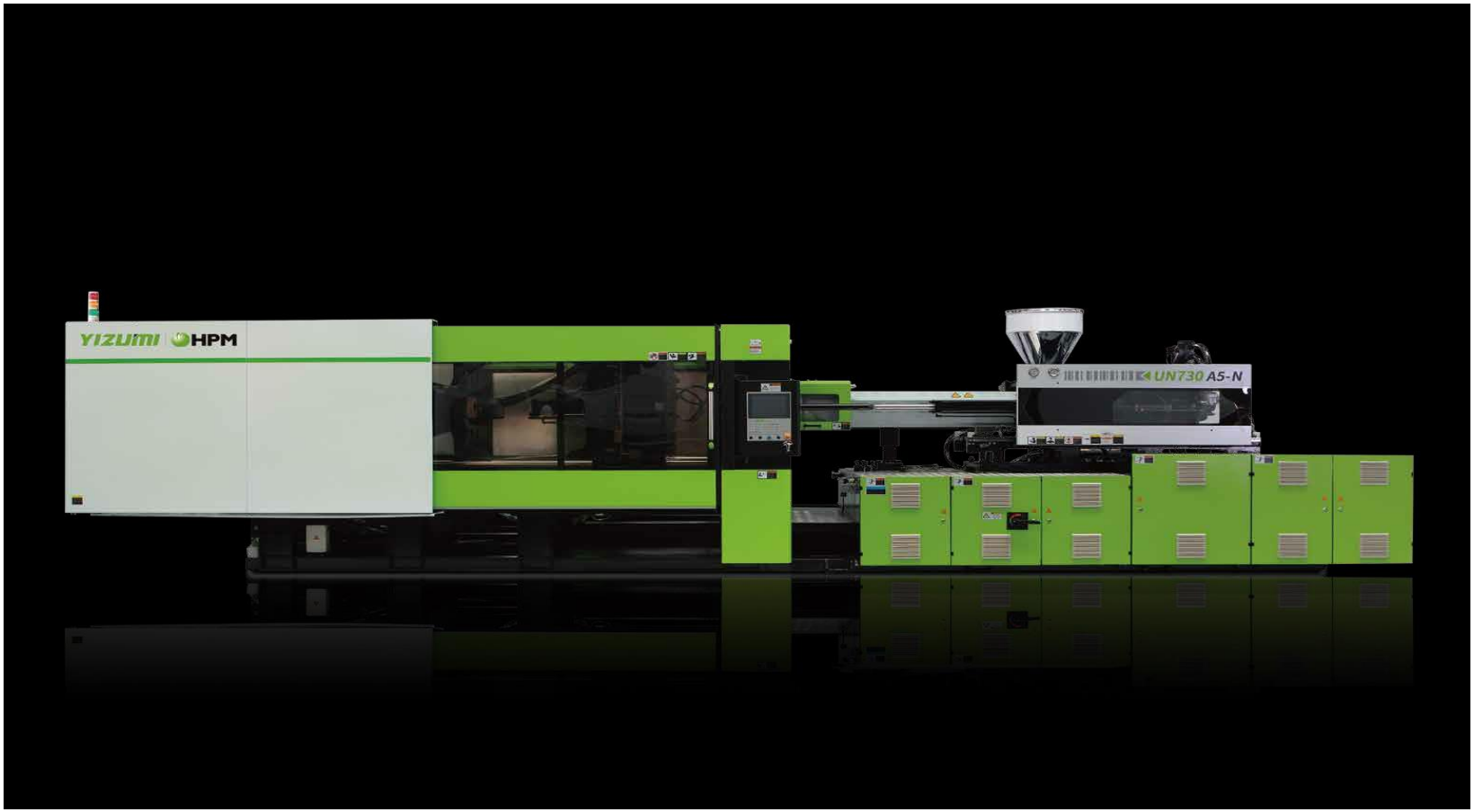


YIZUMI | HPM

A Member of the YIZUMI Group

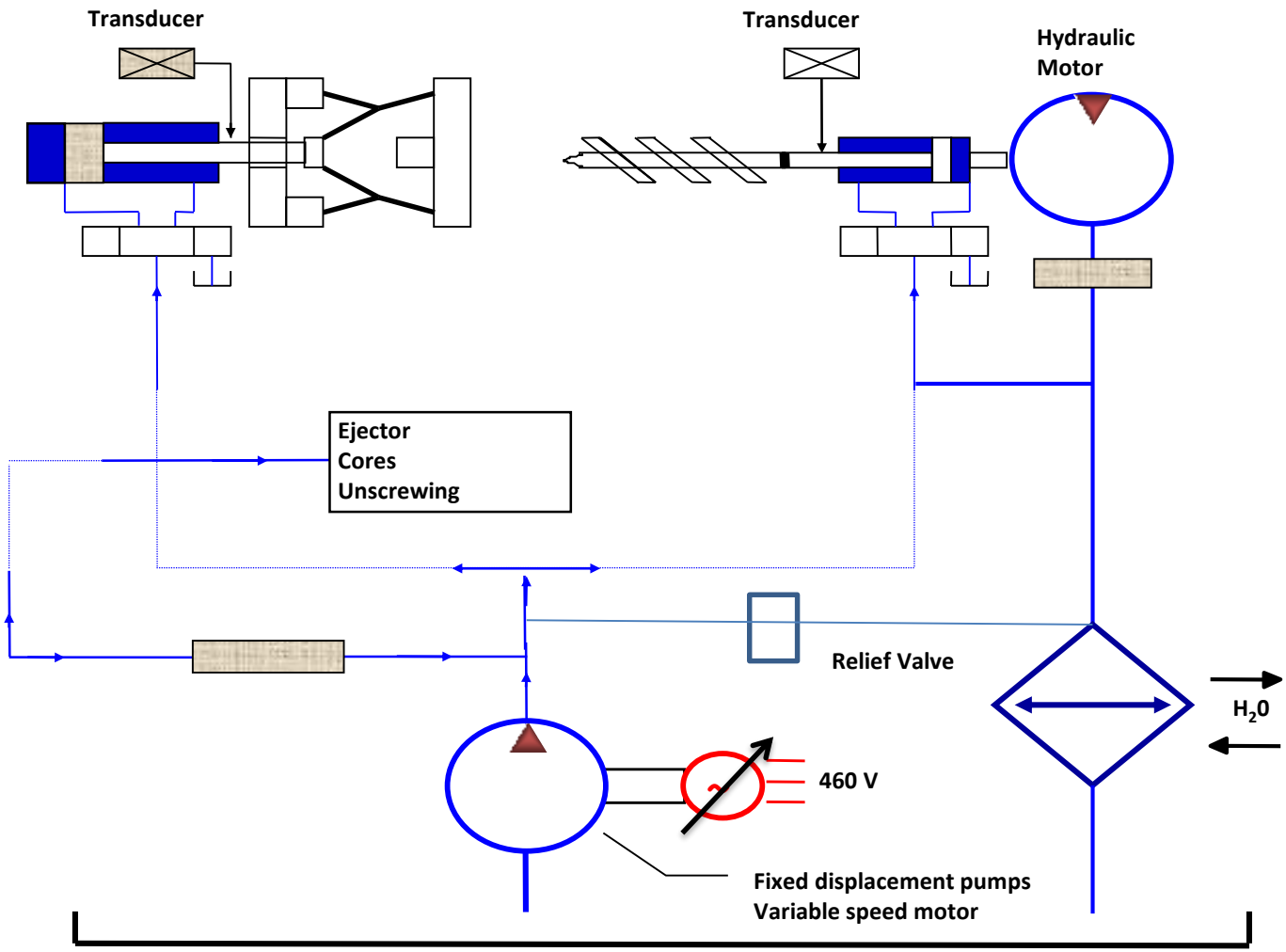


# VARIABLE SPEED MOTOR FIXED PUMP ELECTRO-HYDRAULIC SYSTEM

YIZUMI | HPM

A Member of the YIZUMI Group

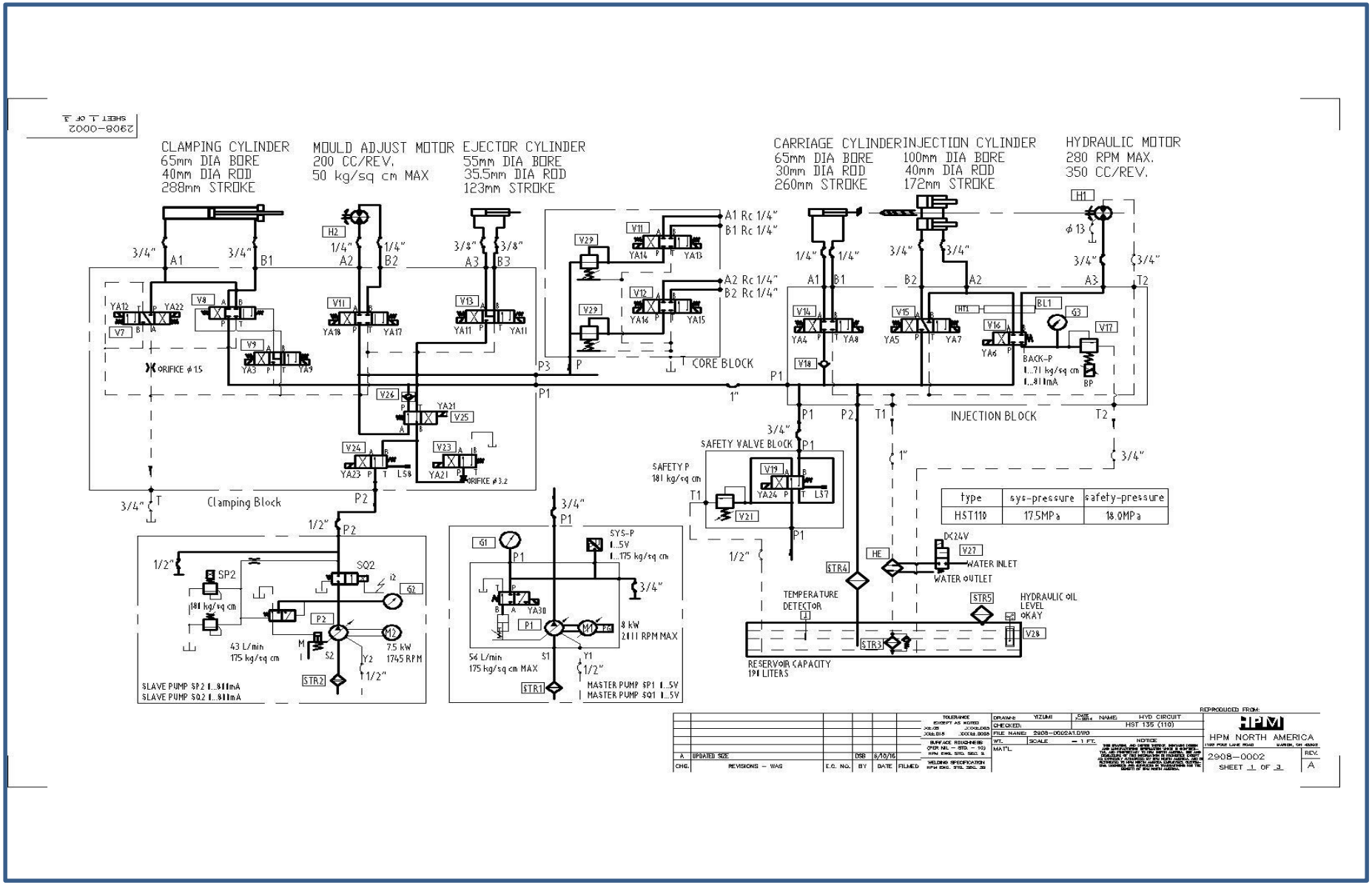


YIZUMI | HPM

A Member of the YIZUMI Group

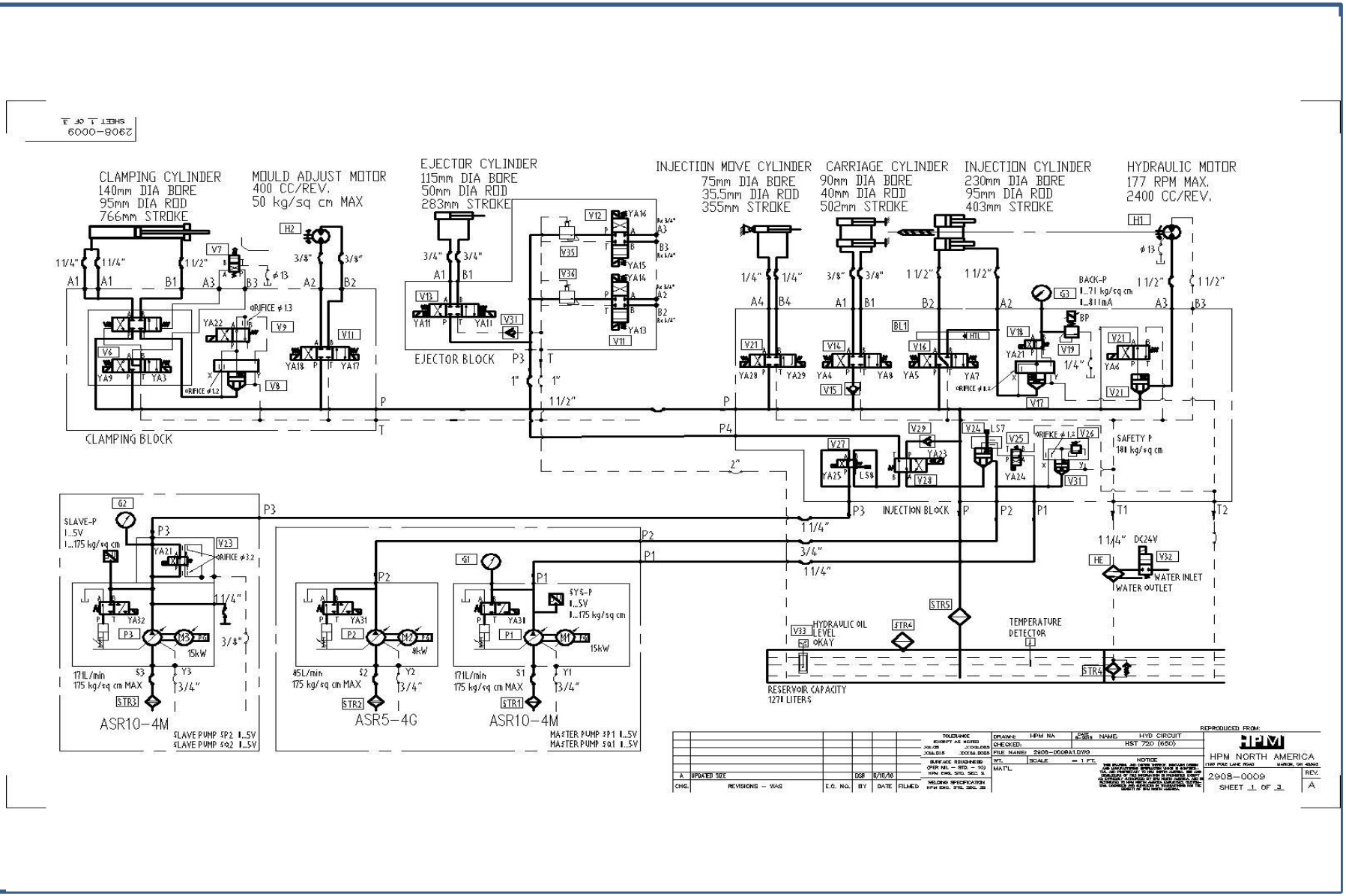


YIZUMI | HPM

A Member of the YIZUMI Group

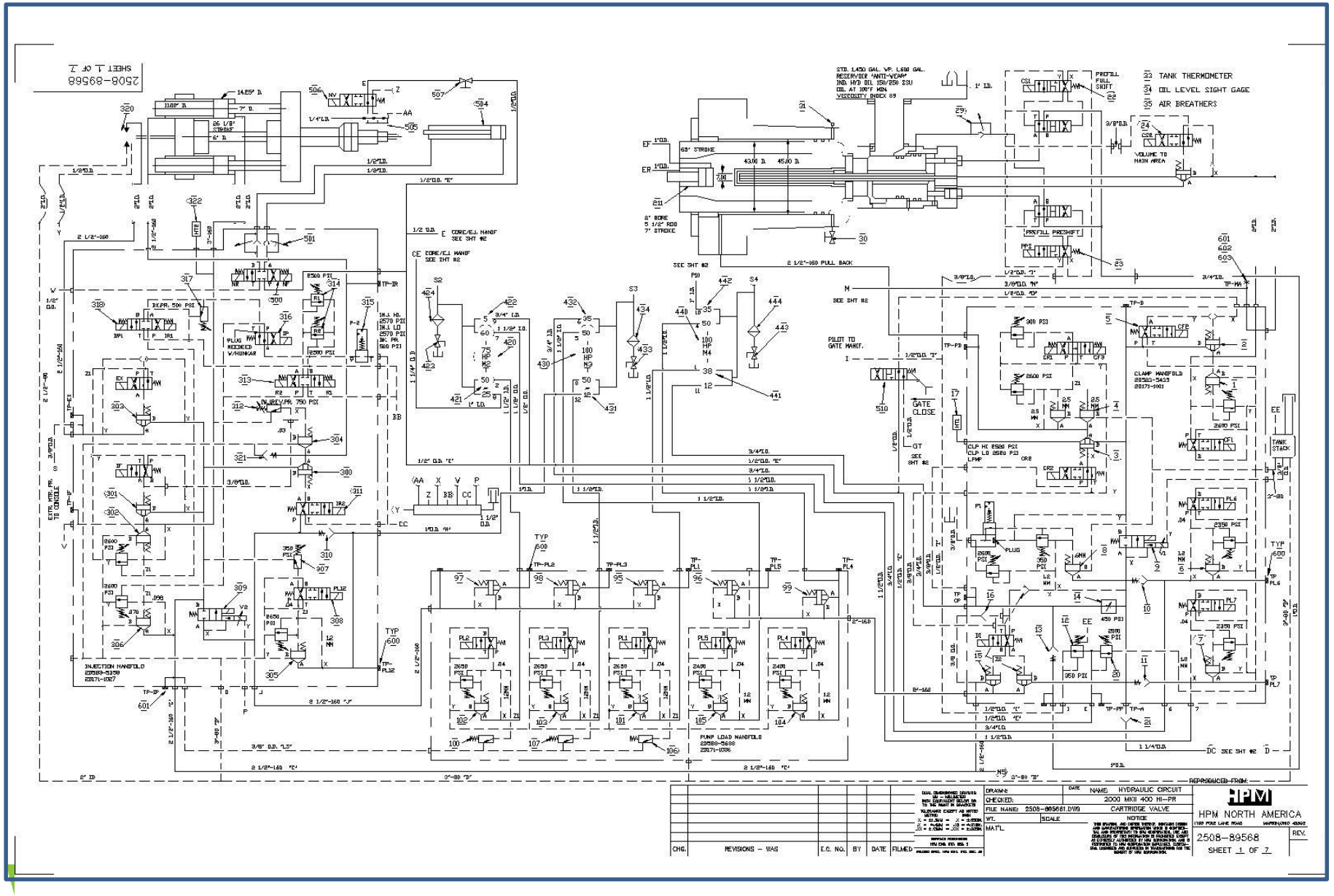
2508-89568
SHEET 1 OF 7
STD. 1450 GAL. VP. 1,600 GAL.
RESERVOIR "ANTI-WEAR"
IND. HYD OIL 150/250 SSU
OIL AT 100°F MIN
VISCOSITY INDEX 89
TANK THERMOMETER
OIL LEVEL SIGHT GAGE
AIR BREATHERS
PREFILL FULL SHIFT
PREFILL PRESHIFT
VOLUME TO MAIN AREA
63" STROKE
43.00 D.
45.00 D.
8" BORE
5 1/2" ROD
7" STROKE
CORE/EJ. MANIF SEE SHT #2
SEE SHT #2
PILOT TO GATE MANIF.
GATE CLOSE
CLAMP MANIFOLD
TANK STACK
INJECTION MANIFOLD
PUMP LOAD MANIFOLD
REPRODUCED FROM:
DRAWN:
CHECKED:
FILE NAME: 2508-895681.DWG
WT.
SCALE
MAT'L
DATE
NAME: HYDRAULIC CIRCUIT
2000 MKII 400 HI-PR
CARTRIDGE VALVE
NOTICE
HPM NORTH AMERICA
2508-89568
SHEET 1 OF 7
REV.
CHG.
REVISIONS - WAS
E.O. NO.
BY
DATE
FILMED

## How does a variable frequency drive work?

A **Variable Frequency Drive** (**VFD**) is a type of motor controller that drives an electric motor by varying the frequency and voltage supplied to the electric motor. Other names for a **VFD** are variable speed drive, adjustable speed drive, adjustable frequency drive, AC drive, microdrive, and inverter.

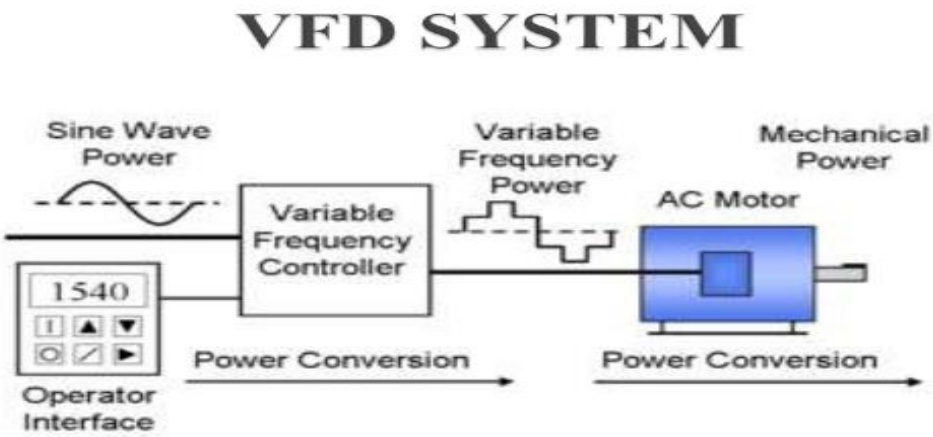


YIZUMI | HPM

A Member of the YIZUMI Group

## How does a variable frequency Vector drive work?

Vector Drive uses feedback of various real world information to further modify the PWM pattern to maintain more precise control of the desired operating parameter, be it speed or torque. Using a more powerful and faster microprocessor, it uses the feedback information to calculate the exact vector of voltage and frequency to attain the goal. It tells the motor what to do, then checks to see if it did it, then changes its command to correct for any error.  A true closed Loop Vector Drive can also make an AC motor develop continuous full torque at low speeds, something that previously only DC drives were capable of.

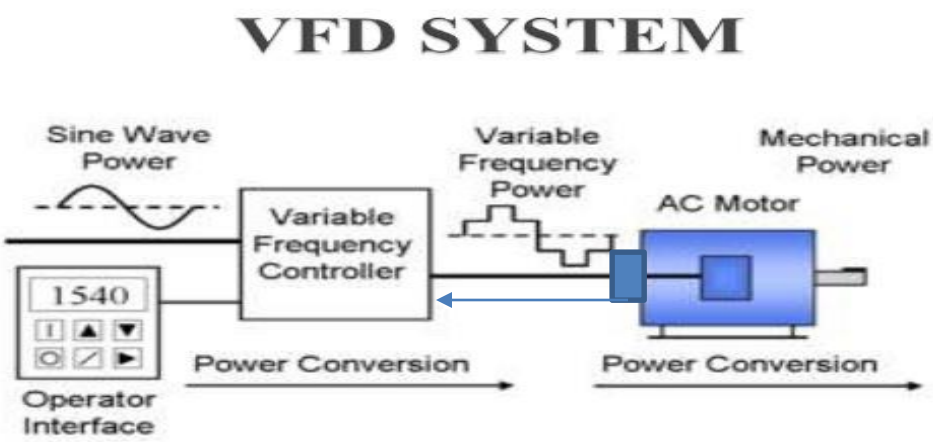


YIZUMI | HPM

A Member of the YIZUMI Group

## What is a servo motor How does it work?

**Servo Motors** are controlled by sending an electrical pulse of variable width, or pulse width modulation (PWM), through the control wire. There is a minimum pulse, a maximum pulse, and a repetition rate. A **servo drive** is a special electronic amplifier used to power electric servomechanisms. A **servo drive** monitors the feedback signal from the servomechanism and continually adjusts for deviation from expected behavior.

YIZUMI | HPM

A Member of the YIZUMI Group

# What is a PMAC servo motor How does it work?

In a **PMAC motor**, permanent magnets provide magnetic field, instead of stator winding. Permanent magnets made from rare earth materials or neodymium. The rotor is slotted armature which carries armature winding. PMAC motors save energy when compared to AC induction motors, and also have several other advantages. Since no electric current is induced in the rotor, PMAC motors have much lower electric resistive losses than AC induction motors. As a consequence, they are more efficient (typically 2-4% at full load), run cooler than induction motors, and typically have higher power factors. PMAC motors also do not experience slip, and are considered synchronous motors. Finally, since the magnetic fields generated by rare-earth magnets are up to twice as powerful as other commonly used permanent magnets, PMAC motors can deliver the same torque as AC induction motors with a smaller, lighter motor

YIZUMI | HPM

A Member of the YIZUMI Group

50KW SERVO MOTOR FIXED PISTON PUMP

YIZUMI | HPM

A Member of the YIZUMI Group

# Average Machine Oil Cooling Costs New Generation Hydraulic Machine

***Machine Oil Cooling***

45 BTU/min required for 150 ton that result in .8 kw energy consumption.

70 BTU/min required for 300 ton that result in 1.4 kw energy consumption.

YIZUMI | HPM

A Member of the YIZUMI Group

# TECHNOLOGY

# HYBRID MACHINERY

YIZUMI | HPM

A Member of the YIZUMI Group

# HYBRID INJECTION MOLDING MACHINE
# LARGE VARIETY OF SYSTEM TYPES


- ***Fixed Speed Motor / Variable Delivery Pump / Electric Screw Drive***
- ***Variable (VFD) Speed Motor / Fixed Delivery Pump / Electric Screw Driv***
- ***Variable (VFD) Speed Motor / Variable Delivery Pump / Electric Screw Drive***
- ***Variable (VFD) Speed Motor / Fixed Delivery & Variable Delivery Pump / Electric Screw***
- ***Variable Speed Servo Motor / Fixed Delivery Pump / Electric Screw Drive***

YIZUMI | HPM

A Member of the YIZUMI Group

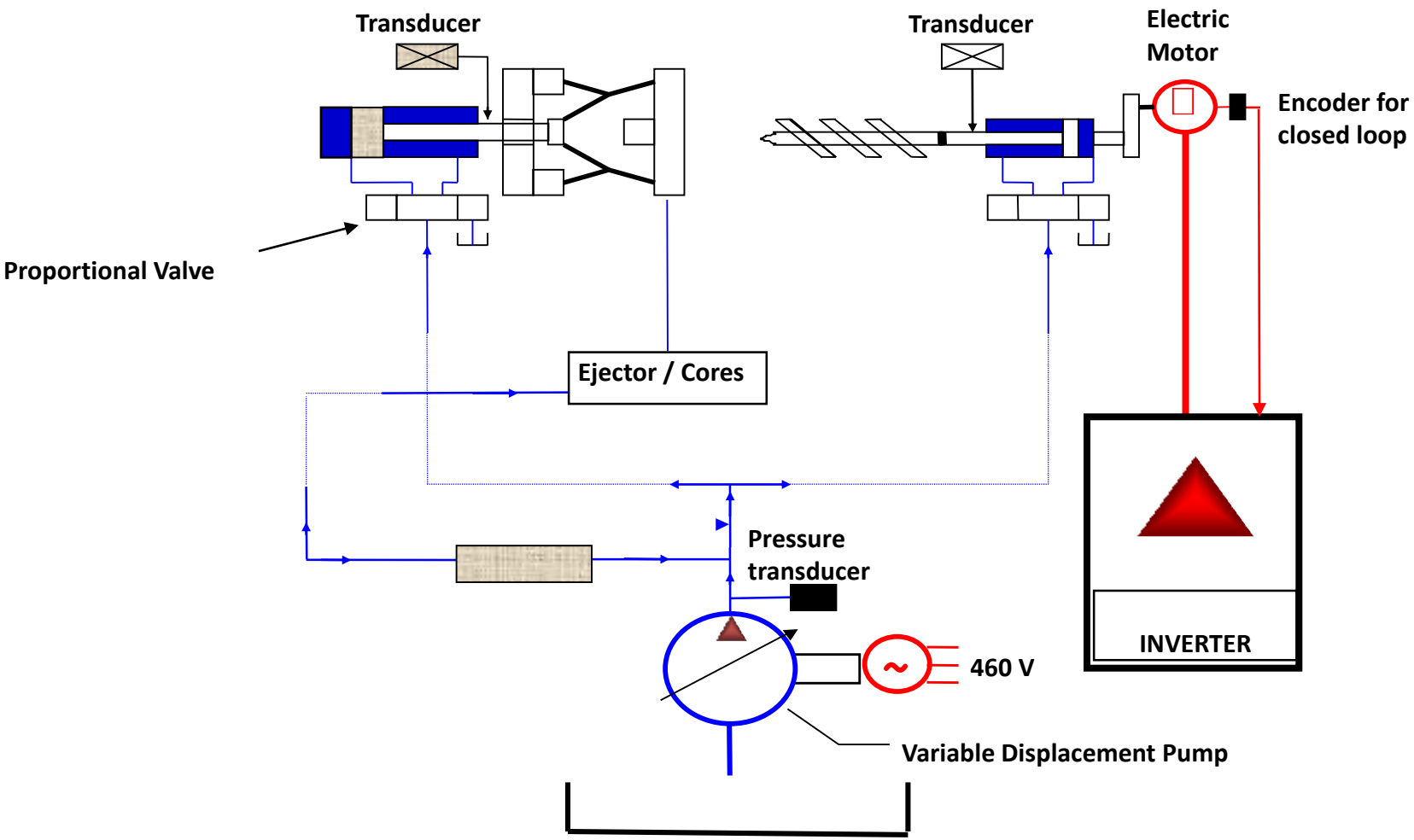


YIZUMI | HPM

A Member of the YIZUMI Group

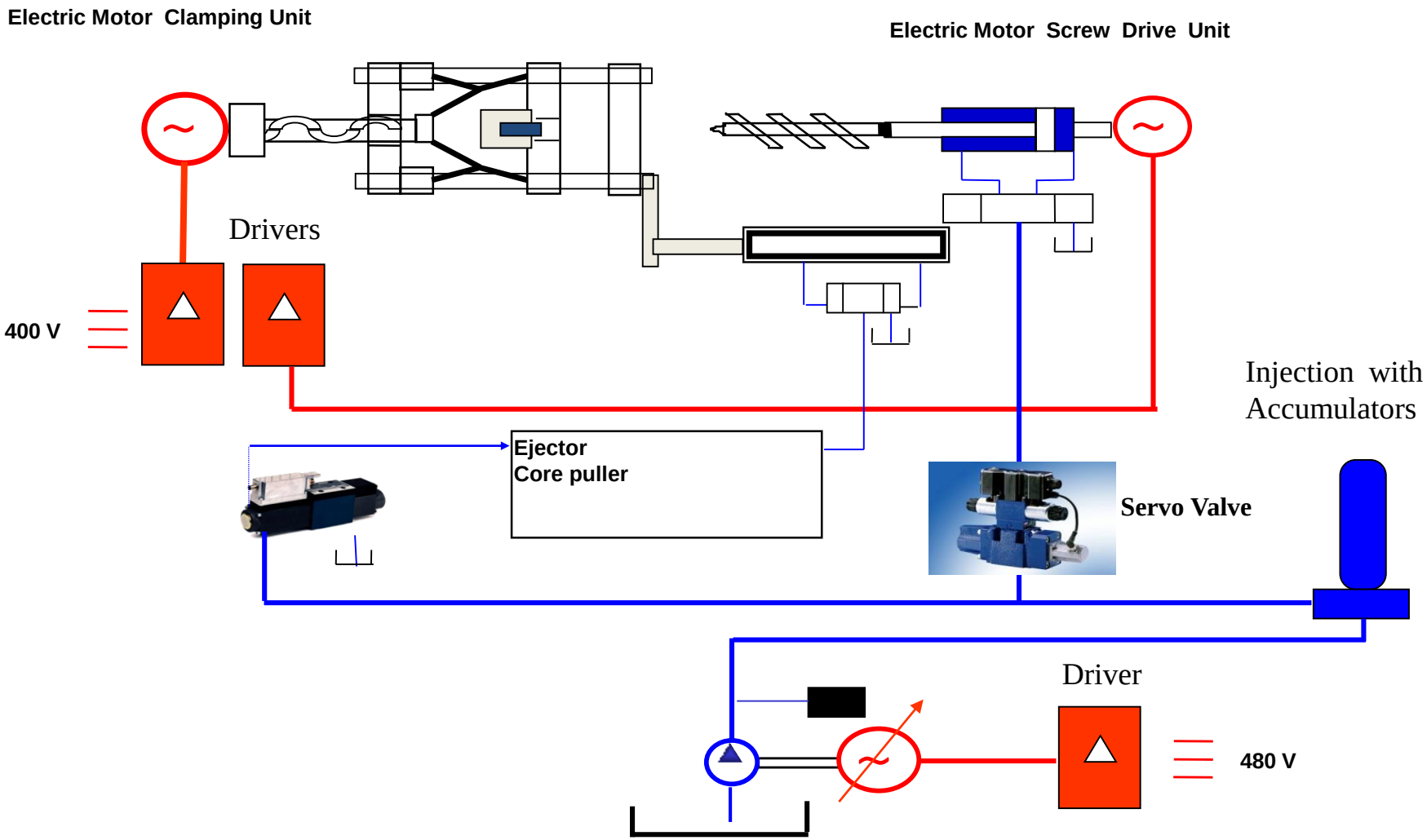


YIZUMI | HPM

A Member of the YIZUMI Group

# *Energy Consumption Comparison*
# *Standard Machine / Servo Pump Machine*

***Standard Series Product – Fixed Speed Electric Motor / Variable Delivery Pump***

***HPM Servo Pump Series Product - Variable Speed Servo Electric Motor / Fixed Pump***

YIZUMI | HPM

A Member of the YIZUMI Group

# *Energy Consumption Comparison*

## *HT-135*
## *HST-135*

### *Example 1*

| | |
|---|---|
| **Item** | **Eyelash Brush** |
| **Material** | **Polypropylene** |
| **Shot Weight** | **22.00 g** |
| **Cycle Time** | **13.2 s** |

| | |
|---|---|
| Filli Time | 0,52 |
| Recovery Time | 2,02 |
| Holding Time | 2,8 |
| Cureing Time | 3,65 |
| Clamp Opening /closing /ejector | 4,2 |

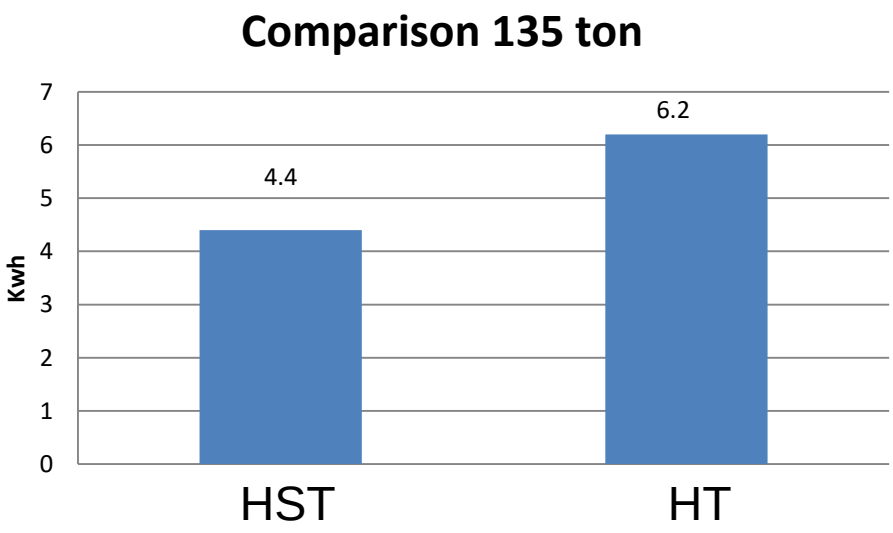


**HT-Series**
***6.2 kWh***

***HST-Series***
***4.4 kWh***

***Energy Saving: 29%***

YIZUMI | HPM

A Member of the YIZUMI Group

# *Energy Consumption Comparison*

## *Example 2*

# *HT-135*
# *HST-135*

| | |
|---|---|
| Item | Container Lid |
| Material | Polypropylene MFI 25 |
| Shot Weight | 33.55 g |
| Cycle Time | 18.0 s |

| | |
|---|---|
| Filli Time | 0,91 |
| Recovery Time | 6,0 |
| Holding Time | 5,0 |
| Cureing Time | 8 |
| Clamp Opening /closing /eject | 6.0 |

**Compaison -135 ton**

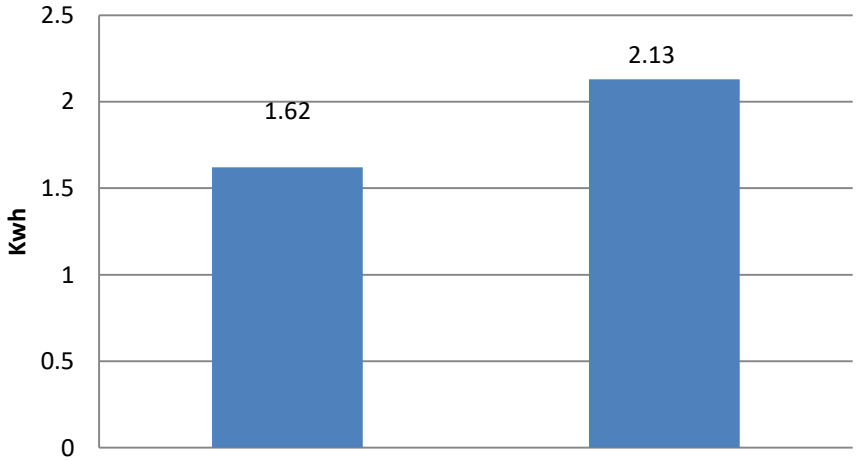


***HT SERIES***
***2.13 kWh***

***HST SERIES***
***1.62 kWh***

***Energy Saving: 25%***

YIZUMI | HPM

A Member of the YIZUMI Group

# Energy Consumption Comparison

## Example 3

## HT-185
## HST-175

| Item | Container / Bin |
|---|---|
| Material | PS |
| Shot Weight | 227.2 g |
| Cycle Time | 29.6 s |

| | |
|---|---|
| Filli Time | 4,0 |
| Recovery Time | 10,5 |
| Holding Time | 6 |
| Cureing Time | 20 |
| Clamp Opening /closing /eject | 5,3 |

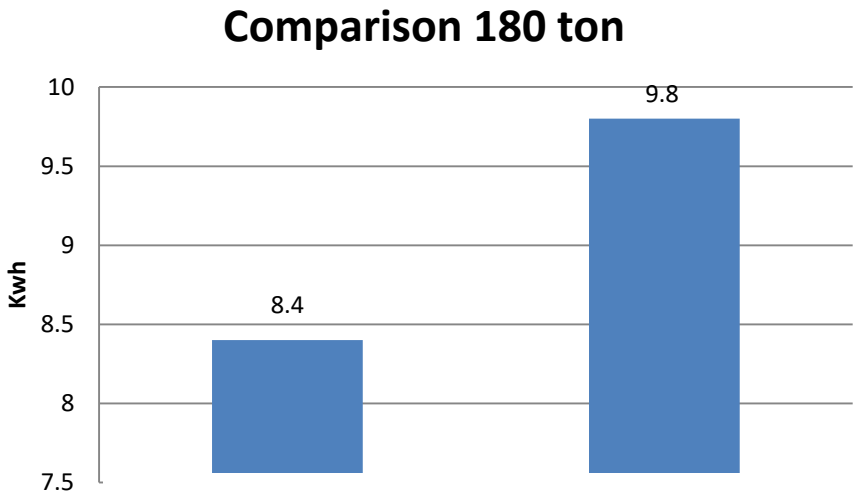


**HT-SERIES** 9.8 kWh

**HST-SERIES** 8.4 kWh

**Energy Saving: 21%**

YIZUMI | HPM

A Member of the YIZUMI Group

# *Energy Consumption Comparison*

## *Example 4*

# *HT-185*
# *HST-175*

| | |
|---|---|
| Item | **Cocktail Fork** |
| Material | **PS** |
| Shot Weight | **64 g** |
| Cycle Time | **18.00 s** |

| | |
|---|---|
| Filli Time | 1,63 |
| Recovery Time | 4,2 |
| Holding Time | 3,0 |
| Cureing Time | 12 |
| Clamp Opening /closing /eject | 4,2 |

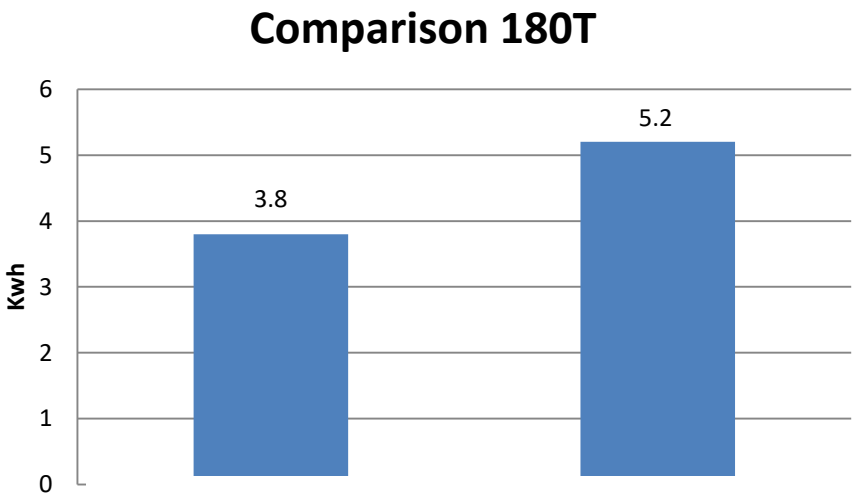


***HT-SERIES***
***5.2 kWh***

***HST-SERIES***
***3.8 kWh***

***Energy Saving: 27%***

YIZUMI | HPM

A Member of the YIZUMI Group

# TECHNOLOGY

# ELECTRIC MACHINERY

YIZUMI | HPM

A Member of the YIZUMI Group

# ELECTRIC MACHINERY


YIZUMI | HPM

A Member of the YIZUMI Group

# ELECTRIC MACHINERY

YIZUMI | HPM

A Member of the YIZUMI Group

# ELECTRIC MACHINERY

YIZUMI | HPM

A Member of the YIZUMI Group

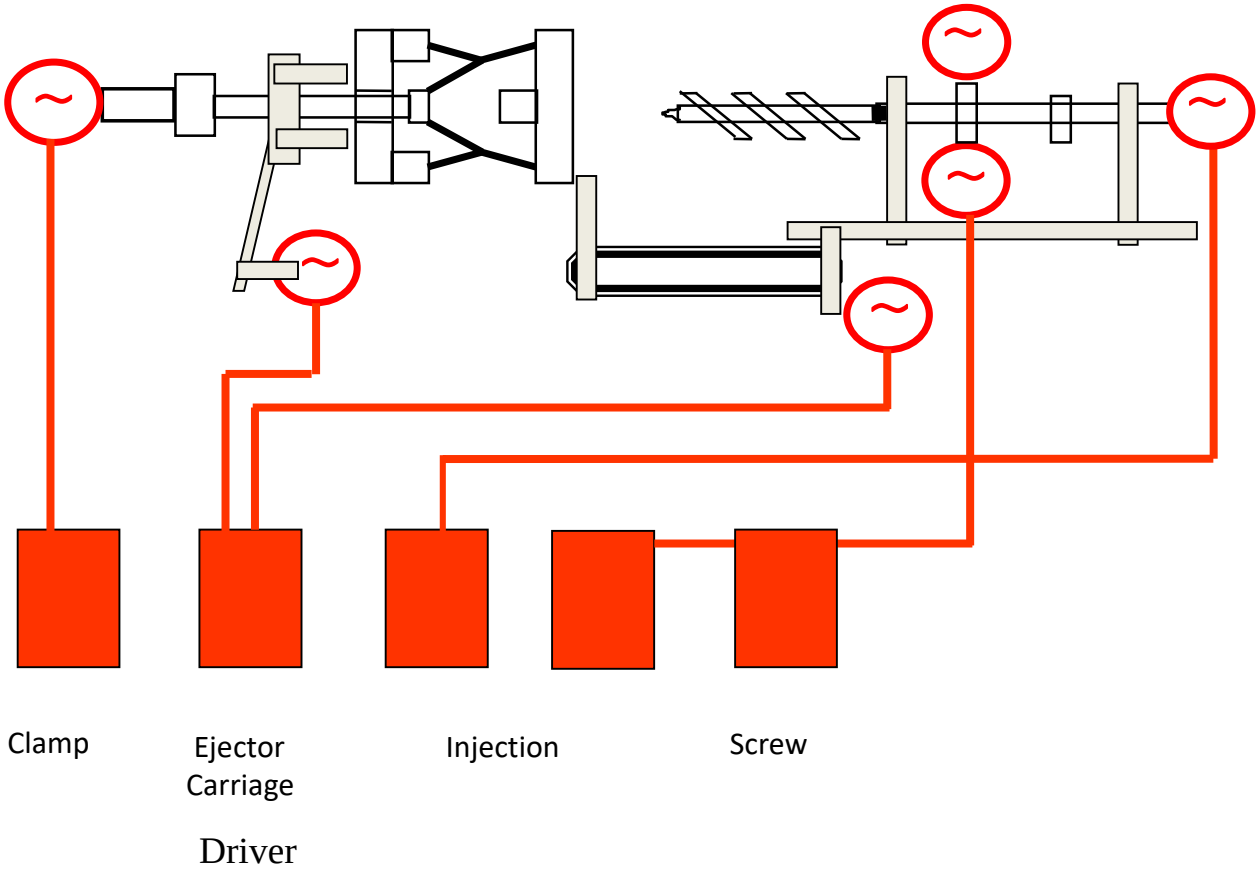


**ELECTRIC MACHINERY DRIVE SYSTEM**

YIZUMI | HPM

A Member of the YIZUMI Group

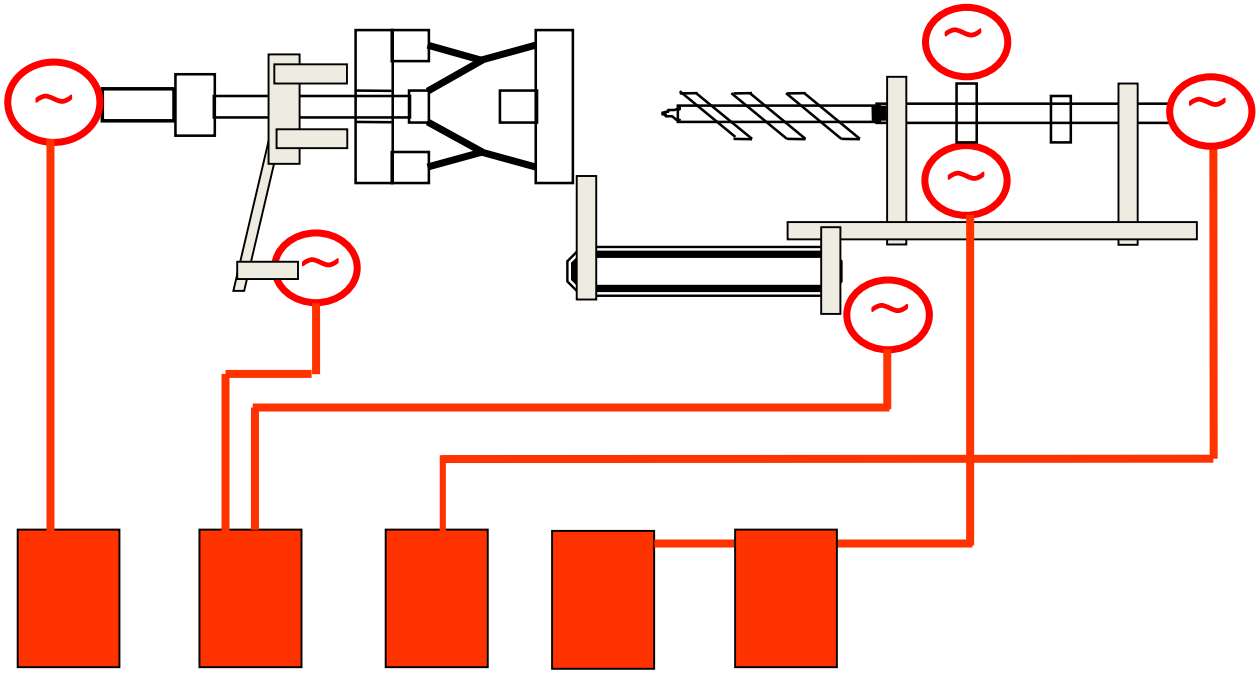


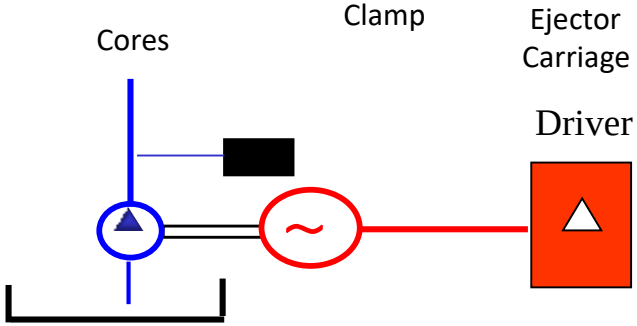


**ELECTRIC MACHINERY DRIVE SYSTEM**

YIZUMI | HPM

A Member of the YIZUMI Group

# *Comparison of Electric vs Old Hydraulic – E-300 / H-300*

| Ton | Model | M/C Type | Mold# | Cavities | Cycle(t), | KW(1) | KW(2) | KW(3) | KW(Avg) | Oil cool | Net | Parts p Hr | KWH Per 1000 | Cost per 1000 | Cost per hour |
|---|---|---|---|---|---|---|---|---|---|---|---|---|---|---|---|
| 300 | E-300 | Electric | Mold 12 | 16 | 16.6 | 7.3 | 10 | 9.6 | 8.97 | 0.00 | 8.97 | 3469.9 | 2.58 | 0.21 | 0.72 |
| 300 | H-300 | Hydraulic | Mold 12 | 16 | 16.7 | 36 | 44.2 | 25.5 | 35.23 | 0.00 | 35.23 | 3449.1 | 10.22 | 0.82 | 2.82 |

## ***Legend***

= Same type of Mold
= Electric machine
= Comparison
= note of major difference

## ***Notes***

Kilowatt usage throughout cycle was more constant therefore less aggressive on incoming power.
Part costing approximatly 1/4 using electric machine for this particular mold.
Hydraulic machine approx 15 years old therefore your data will show an even greater difference.
Unit electrical cost based on 0.10 per KW.

YIZUMI | HPM

A Member of the YIZUMI Group

# *Energy Consumption Comparison*

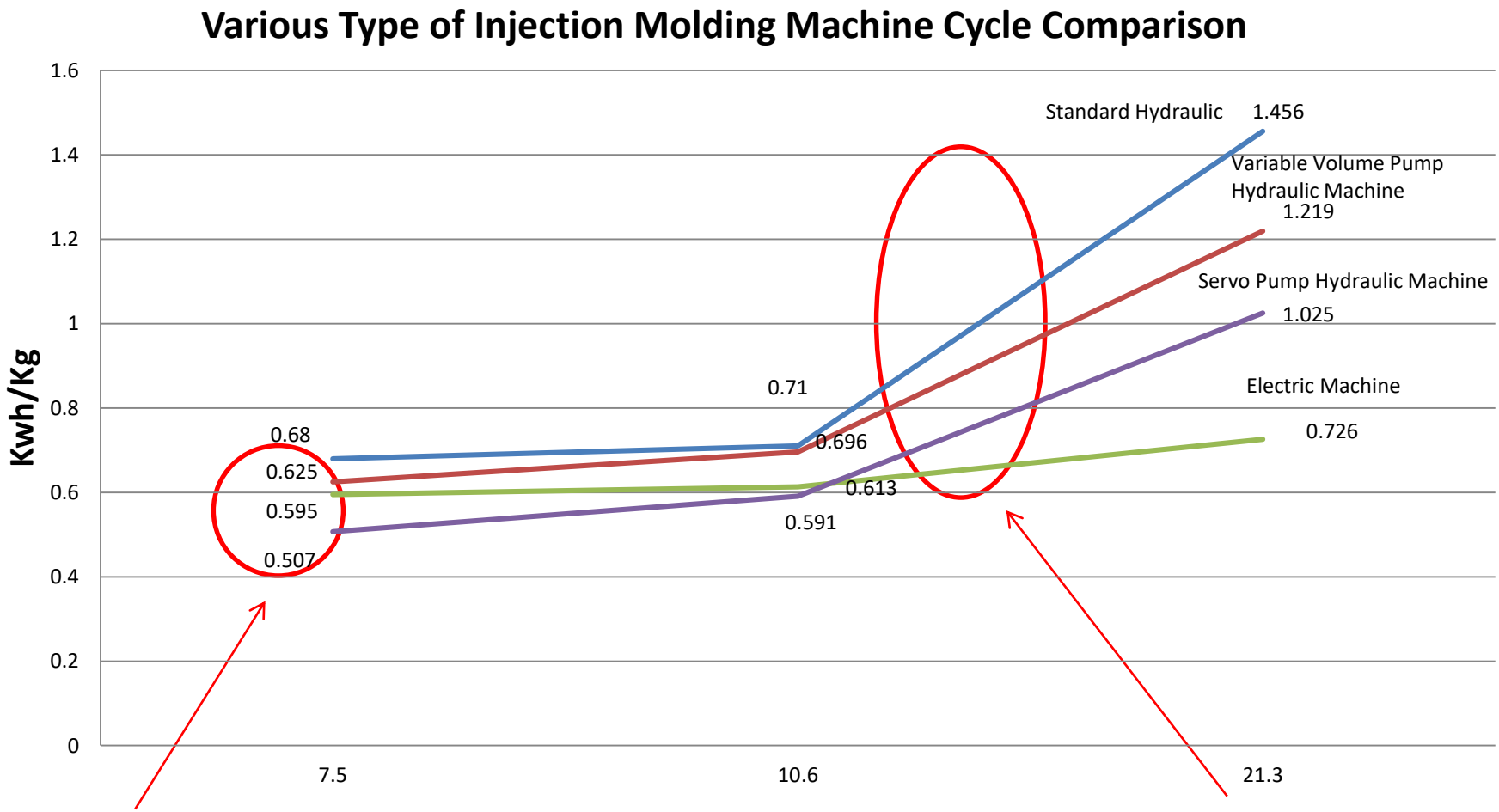


***Minimum energy savings for short cycle time***

***Increasing the cycle time the energy savings increases***

YIZUMI | HPM

A Member of the YIZUMI Group

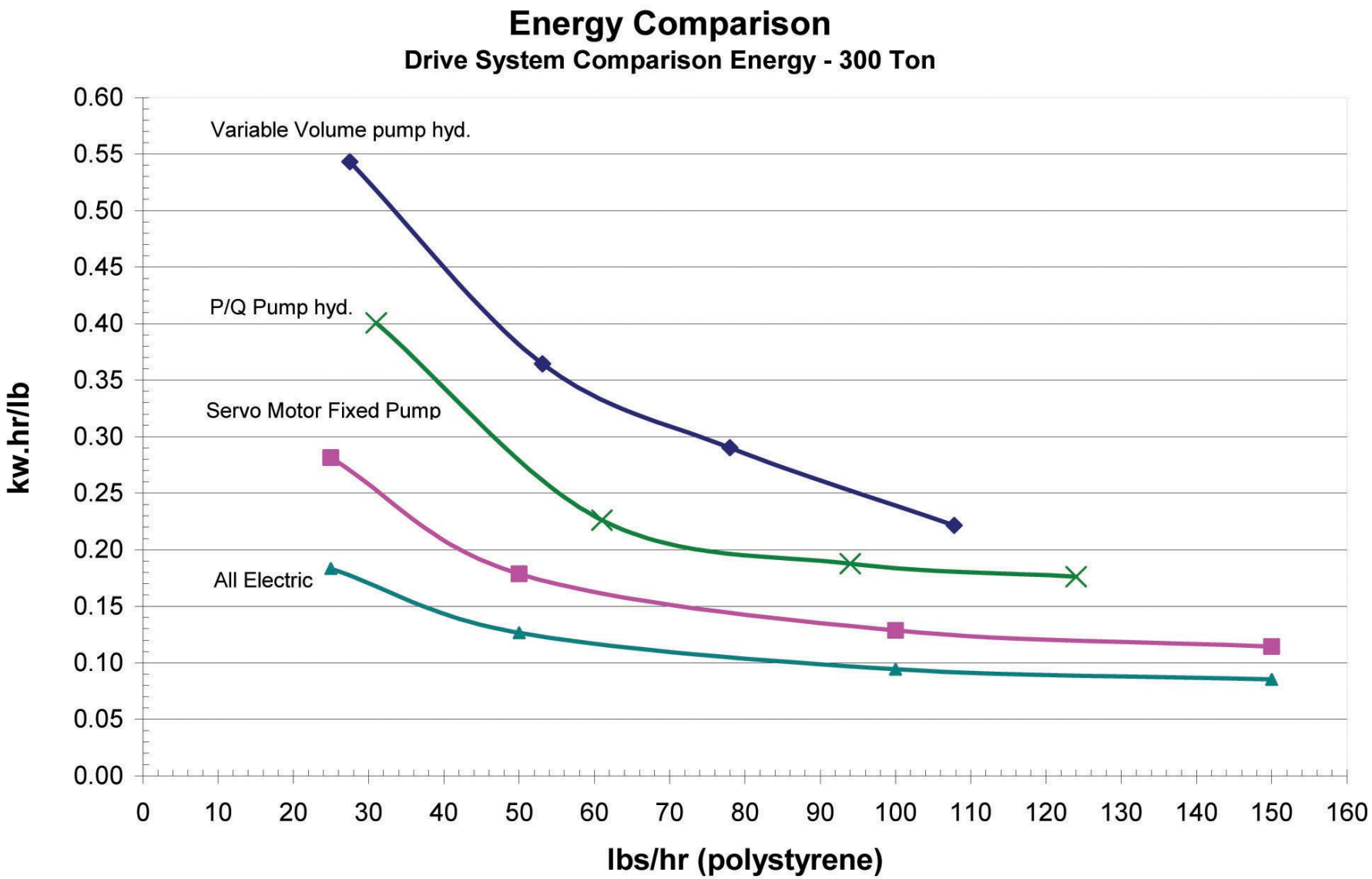


YIZUMI | HPM

A Member of the YIZUMI Group

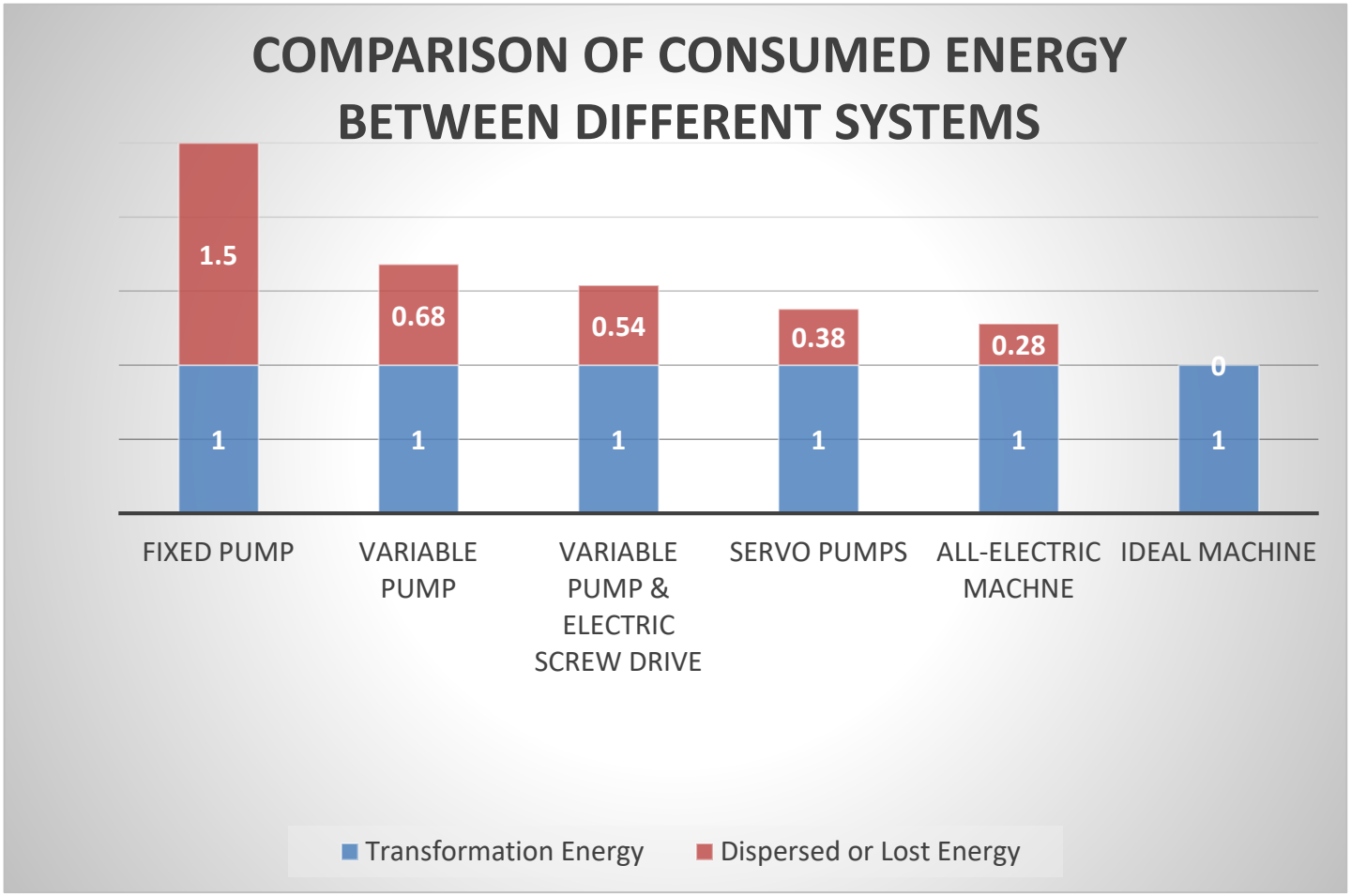


YIZUMI | HPM

A Member of the YIZUMI Group

# *TIPS TO REDUCE ENERGY CONSUMPTION & COST*

- **Calculate life cycle costs for new machines (i.e., cost to purchase + cost to operate, including energy costs), which can reduce product costs by 3 percent.**
- **Optimize parameters and cycle times, making sure you are not using more force or time than you actually need.**
- **Reduce scrap levels, which cause unnecessary energy consumption.**
- **Be vigilant about maintenance, especially on heat exchangers and cooling channels.**
- **Plan and control the startup and shutdown sequence to reduce "idling" time.**

# *TIPS TO REDUCE ENERGY CONSUMPTION*

- **Proper Feed Screw Design.**
- **Machine idle periods - switch off or put machine in standby mode.**
- **Barrel heaters, mold heaters and cooling fans left on between runs.**
- **Cooling water circulating through idle tooling chillers and TCU Running.**
- **Compressed air supplied to idle machines.**
- **Tweaking of machine by operator causes more lost time and energy than almost any other cause.**
- **Optimizing the machine process reduces the energy needed.**
- **Establish machine specific shut down parameters.**
- **Plan tool changes into production schedules and use rapid setup methods.**

# *TIPS TO REDUCE ENERGY CONSUMPTION*

- **Get machines setup right, record the settings and do not change them unless absolutely necessary.**
- **Use Statistical Process Control to control machine settings and performance.**
- **New generation machines have improved energy efficiency and can reduce product costs.**
- **Getting the right machine for the job is vital, machine should be closely matched to the products as possible. Using large machines for small products is inherently wasteful.**
- **Improving the PF (Power Factor) is cost effective and simple with excellent payback. Plan and control machine start-up sequence.**

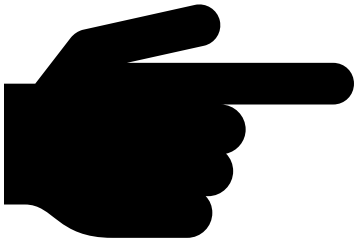

# THANK YOU FOR YOUR ATTENTION

Please Visit Us At Our Website http://www.yizumi-hpm.com/

YIZUMI | HPM

A Member of the YIZUMI Group